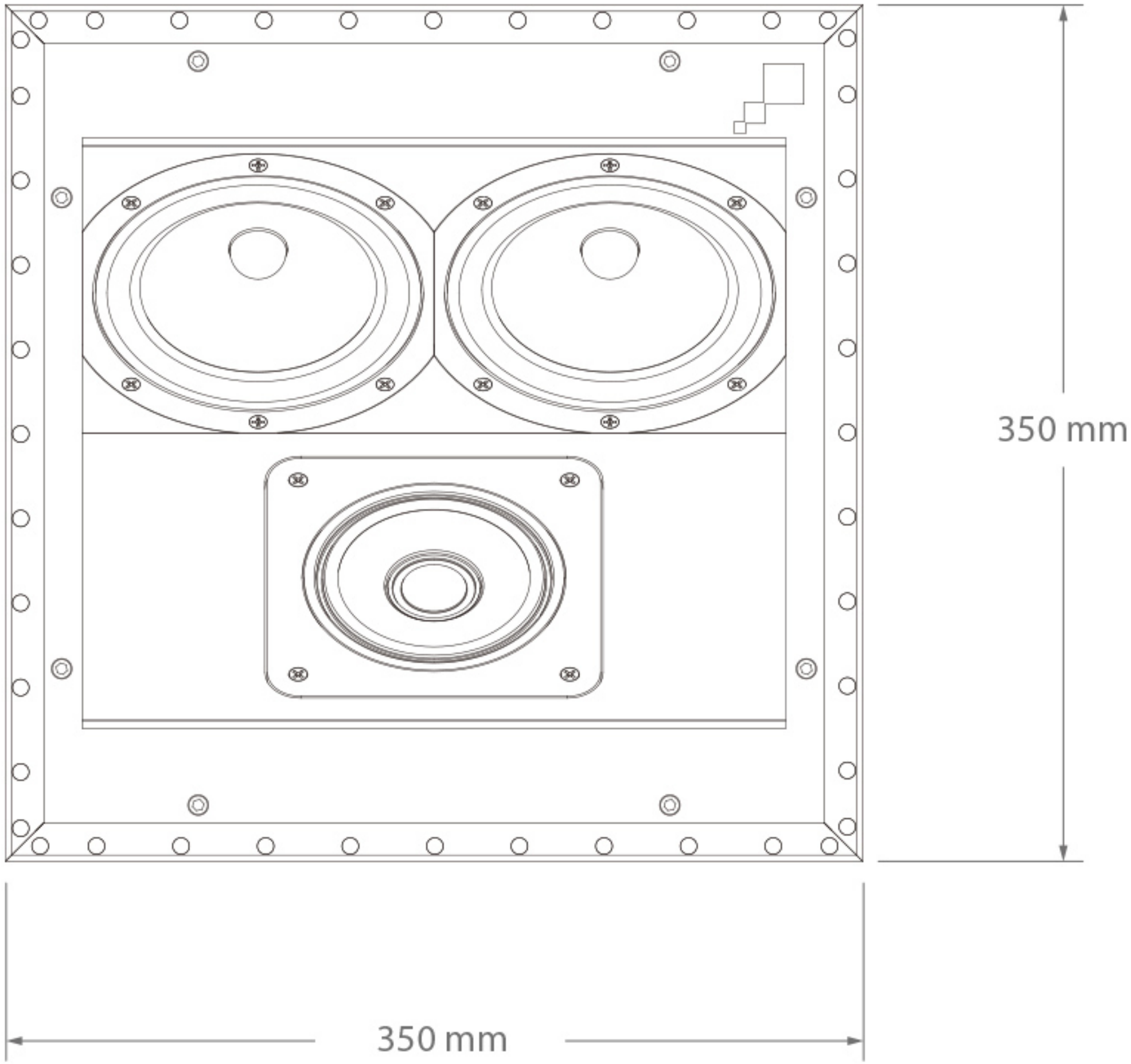
350 mm
350 mm